750W QCW
Air-cooled Fiber Laser

FFRQ-75/750-P

Characteristics

- Build-in pulse editing software
- Multiple brightness options available
- Precision controls on pulse energy and pulse counts
- Stable power at wide operating temperature range
- 48 VDC or 24 VDC input options

Applications

- Excellent replacement for YAG laser
- Jewelry processing
- Spot welding on electronics
- Ceramic scribing

Specifications

Product Code	FFRQ-75/750-P
Optical Parameters	
Operating Mode	QCW
Max Average Power (W)	75
Max Peak Power (W)	750
Max Pulse Energy (J)	7.5
Pules Width (ms)	0.01 - 50
Peak Power Tunability (%)	10 - 100
Beam Quality M^2	< 1.2 (14μm) < 1.3 (20μm) < 2.5 (50μm)
Output Power Instability 25℃ (%)	< 2 (2 hours)
Emission Wavelength (nm)	1080 ± 10
Spectrum Width FWHM (nm)	< 4
Modulation Frequency (kHz)	50
Red Laser Power (μW)	> 200
Fiber Delivery Cable Parameters	
Output Type	RQB
Length (m)	3 (Customized)
Core Diameter (μm)	14/20/50/100
Armor Cable Diameter (mm)	9
Minimum Bending Radius (mm)	200
Electrical Characteristics	
Operating Voltage (VDC)	42 - 55
Max Power Consumption (kW)	2.5
Control Mode	RS232, AD, I/O
Other Characteristics	
Operating Temperature (℃)	10 - 40
Humidity (%)	10 - 80
Cooling Method	Air Cooled
Storage Temperature (℃)	-10 to 60
Dimension (mm)	W325 x D348 x H133
Weight (kg)	10

EVERFOTON

Everfoton Technologies Corporation Limited

Address. No.9 Optics Valley Avenue, Wuhan, Hubei, China

Post Code. 430073

Nanjing Fiberfoton Technologies Corporation Limited

Address. 9 Kechuang avenue, F 3, Jiangbei New District, Nanjing, Jiangsu **Post Code**. 211505

Telephone. 027-65271788

Website. www.everfoton.com

Product pictures and information are for reference only, the company reserves the right to modify the manual and products, please refer to the actual situation.
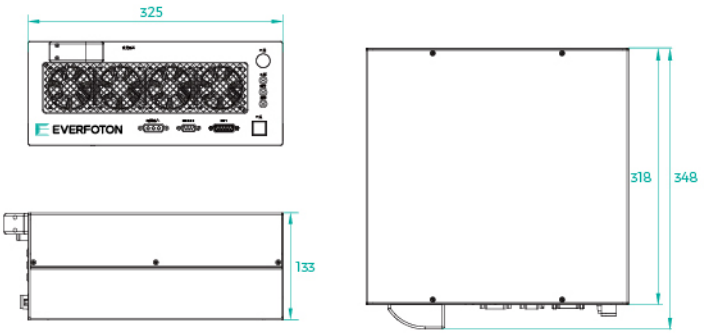
Everfoton Wechat